Model Name: GA-X150-PLUS WS *rev 1.0*

www.xinxunwei.com 400-800-9990

SHEET	TITLE
01	COVER SHEET
02	BOM & PCB MODIFY HISTORY
03	BLOCK DIAGRAM
04	CPU_LGA1151-A
05	CPU_LGA1151-B-DDR4
06	CPU_LGA1151-C
07	CPU_LGA1151-D
08	DDR 4 CHANNEL A
09	DDR 4 CHANNEL B
10	PCH CLOCK BUFFER
11	PCH DMI,USB,PCIE
12	PCH MISC
13	PCH SATA,PCIE,SATA_EXPRESS
14	PCH_PWR,GND
15	Dual BIOS
16	I/O ITE8628
17	HWM
18	FAN CTRL-SIO
19	PCIEX16 SLOT
20	PCIEX4 SLOT
21	PCIEX1*2 SLOT / switch
22	M.2 x4
23	SATA EXPRESS
24	switch for M.2 / SATA EXPRESS & PCI
25	VCORE_ ISL95856(PWM)
26	VCORE_ ISL95856(Vcore)
27	VCORE_ ISL95856(VccGT)
28	VCCSA_VCCIO_VCCPLL
29	RT8237_DDR_BEAD
30	RT8068A_VPP POWER
31	RT8237_PCH-BEAD
32	DISCRETE POWER
33	NTC3933 OVER VOLTAGE
34	ATX POWER , -PROCHOT

SHEET	TITLE
35	KB_MS
36	R_USB30
37	INTEL I219
38	USB_LAN CONNECTOR-I219
39	Realtek ALC892
40	REAR AUDIO JACK
41	F_USB30
42	F_USB20
43	COM , LPT , TPM , THB
44	F_PANEL
45	IT8892E/FX
46	PCI SLOT 1&2
47	IT8892 POWER
48	EMI-ESD
49	TABLE LIST
50	
51	
52	
53	
54	

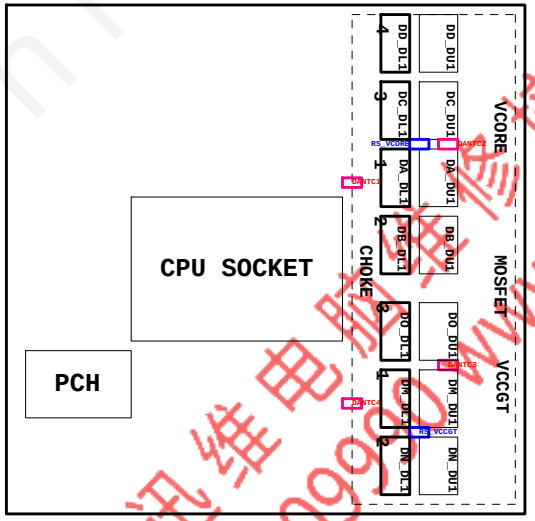

Gigabyte Technology

Title: Cover Sheet

Size: Custom | Document Number: GA-X150-PLUS WS | Rev: 1.0

Date: Monday, November 23, 2015 | Sheet 1 of 49

迅维电脑维修培训学校 400800990 www.xinxunwei.com

www.xinxunwei.com 400-800-9990

GA-X150-PLUS WS

Component value change history

Data	Change Item	Reason
2015/10/13 EBOM:0.1	9MX150PLW-00-01 BOM first release	
2015/10/29	Modify RS_VCCGT 100K/1/4/S change to 100K/4/1	
	MASK VCCGT 線路.	
	Modify DAC39,DAR63,DAC27,DAR80,DAR71,DAR74,DM_DR1,DM_DR2,DM_DR4 change to short pad	
2015/11/03 EBOM:1.0	9MX150PLW-00-10A BOM first release	

Circuit or PCB layout change

DATE	Change Item	Reason
2015/10/13 EBOM:0.1	PCB first release	
2015/11/02	MASK VCCGT 線路.	
2015/11/03 EBOM:1.0	PCB release	

迅维电脑维修培训学校 400800990 www.xinxunwei.com

GIGABYTE™

Title: BOM & PCB MODIFY HISTORY

Size: Custom | Document Number: GA-X150-PLUS WS | Rev: 1.0

Date: Monday, November 23, 2015 | Sheet 2 of 49

BLOCK DIAGRAM

www.xinxunwei.com 400-800-9990

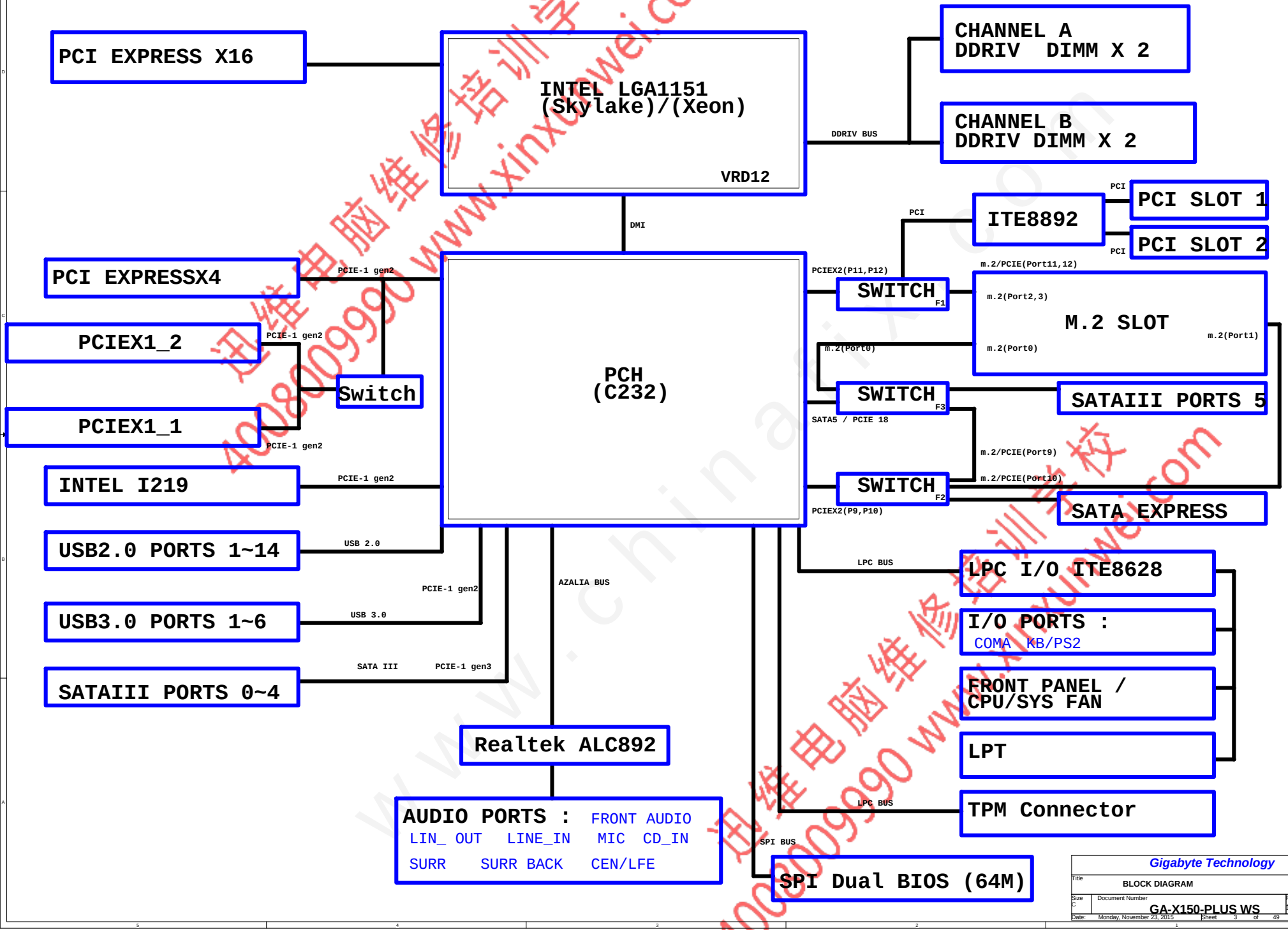

Gigabyte Technology		
Title: BLOCK DIAGRAM		
Size: C	Document Number: GA-X150-PLUS WS	Rev: 1.0
Date: Monday, November 23, 2015	Sheet 3 of 49	

www.xinxunwei.com 400-800-9990

From SKL_0.2B

檢查組態調整電阻
The CFG signals default value of '1'

LGA1151E SKT_H4

* WR7 , WR1 , WR81 改 short pad

* 刪 net

* 刪 WR17 , WR14 , WR10 , WR29 , WR25 , WR56 , WR55

* 刪 WR90

* 刪 WR91

* 刪 net N_CPU_VCCST_PWOK

* 刪 net

* 刪 net

* 刪 net

LGA1151D SKT_H4

LGA1151C SKT_H4

CPU-SK/1151/S/15

G-15u : (CPU-SK/1151/S/15)
10SC1-F01151-11R / 10SC1-F01151-12R
G-FL : (CPU-SK/1151/S/GF)
10SC1-F01151-21R / 10SC1-F01151-22R

-CPURST

Bifurcation Config.	Signals Lanes CFG[6]	CFG[5]	CFG[2]
1x16	1	1	1
1x16 Reversed	1	1	0
2x8	1	0	1
2x8 Reversed	1	0	0
1x8+2x4	0	0	1
1x8+2x4 Reversed	0	0	0

W=12 mil out of CPU
S=15 mil out of CPU

Gigabyte Technology

Title: CPU LGA1151-A

Size: Custom | Document Number: GA-X150-PLUS WS | Rev: 1.0

Date: Monday, November 23, 2015 | Sheet 4 of 49

Gigabyte Confidential Do not Copy
www.chinafix.com
迅维电脑维修培训学校 400800990 www.xinxunwei.com

www.xinxunwei.com 400-800-9990

* 改DDR4 net

LGA1151A SKT_H4 LGA1151

MDA0	AE38	DDR0_DQ[0]	AW18	M_DCLKA0	M_DCLKA0 {8}
MDA1	AE37	DDR0_DQ[1]	AV18	M_-DCLKA0	M_-DCLKA0 {8}
MDA2	AG38	DDR0_DQ[2]	AW17	M_DCLKA1	M_DCLKA1 {8}
MDA3	AG37	DDR0_DQ[3]	AV17	M_-DCLKA1	M_-DCLKA1 {8}
MDA4	AE39	DDR0_DQ[4]	AW16	M_DCLKA2	M_DCLKA2 {8}
MDA5	AE40	DDR0_DQ[5]	AV16	M_-DCLKA2	M_-DCLKA2 {8}
MDA6	AG39	DDR0_DQ[6]	AT16	M_DCLKA3	M_DCLKA3 {8}
MDA7	AG40	DDR0_DQ[7]	AU16	M_-DCLKA3	M_-DCLKA3 {8}
MDA8	AJ38	DDR0_DQ[8]			
MDA9	AJ37	DDR0_DQ[9]	AY24	CKEA0	CKEA0 {8}
MDA10	AL38	DDR0_DQ[10]	AW24	CKEA1	CKEA1 {8}
MDA11	AL37	DDR0_DQ[11]	AV24	CKEA2	CKEA2 {8}
MDA12	AJ40	DDR0_DQ[12]	AV25	CKEA3	CKEA3 {8}
MDA13	AJ39	DDR0_DQ[13]			
MDA14	AL39	DDR0_DQ[14]	AW12	M_-CSA0	M_-CSA0 {8}
MDA15	AL40	DDR0_DQ[15]	AU11	M_-CSA1	M_-CSA1 {8}
MDA16	AN38	DDR0_DQ[16]/DDR0_DQ[32]	AV13	M_-CSA2	M_-CSA2 {8}
MDA17	AN40	DDR0_DQ[17]/DDR0_DQ[33]	AV10	M_-CSA3	M_-CSA3 {8}
MDA18	AR38	DDR0_DQ[18]/DDR0_DQ[34]			
MDA19	AR37	DDR0_DQ[19]/DDR0_DQ[35]	AW11	MODT_A0	
MDA20	AN39	DDR0_DQ[20]/DDR0_DQ[36]	AU14	MODT_A1	
MDA21	AN37	DDR0_DQ[21]/DDR0_DQ[37]	AU12	MODT_A2	
MDA22	AR39	DDR0_DQ[22]/DDR0_DQ[38]	AY10	MODT_A3	
MDA23	AR40	DDR0_DQ[23]/DDR0_DQ[39]			
MDA24	AW37	DDR0_DQ[24]/DDR0_DQ[40]	AY13	SBAA0	SBAA0 {8}
MDA25	AU38	DDR0_DQ[25]/DDR0_DQ[41]	AV15	SBAA1	SBAA1 {8}
MDA26	AV35	DDR0_DQ[26]/DDR0_DQ[42]	AW23	BG_A0	BG_A0 {8}
MDA27	AW35	DDR0_DQ[27]/DDR0_DQ[43]			
MDA28	AU37	DDR0_DQ[28]/DDR0_DQ[44]	AW13	MAAA16	
MDA29	AV37	DDR0_DQ[29]/DDR0_DQ[45]	AV14	MAAA14	
MDA30	AT35	DDR0_DQ[30]/DDR0_DQ[46]	AY11	MAAA15	
MDA31	AU35	DDR0_DQ[31]/DDR0_DQ[47]			
MDA32	AY8	DDR0_DQ[32]/DDR1_DQ[0]	AW15	MAAA0	
MDA33	AW8	DDR0_DQ[33]/DDR1_DQ[1]	AU18	MAAA1	
MDA34	AV6	DDR0_DQ[34]/DDR1_DQ[2]	AU17	MAAA2	
MDA35	AU6	DDR0_DQ[35]/DDR1_DQ[3]	AV19	MAAA3	
MDA36	AU8	DDR0_DQ[36]/DDR1_DQ[4]	AT19	MAAA4	
MDA37	AV8	DDR0_DQ[37]/DDR1_DQ[5]	AU20	MAAA5	
MDA38	AW6	DDR0_DQ[38]/DDR1_DQ[6]	AV20	MAAA6	
MDA39	AY6	DDR0_DQ[39]/DDR1_DQ[7]	AU21	MAAA7	
MDA40	AY4	DDR0_DQ[40]/DDR1_DQ[8]	AT20	MAAA8	
MDA41	AV4	DDR0_DQ[41]/DDR1_DQ[9]	AT22	MAAA9	
MDA42	AT1	DDR0_DQ[42]/DDR1_DQ[10]	AY14	MAAA10	
MDA43	AT2	DDR0_DQ[43]/DDR1_DQ[11]	AU22	MAAA11	
MDA44	AV3	DDR0_DQ[44]/DDR1_DQ[12]	AV22	MAAA12	
MDA45	AW4	DDR0_DQ[45]/DDR1_DQ[13]	AV12	MAAA13	
MDA46	AT4	DDR0_DQ[46]/DDR1_DQ[14]	AV23	BG_A1	BG_A1 {8}
MDA47	AT3	DDR0_DQ[47]/DDR1_DQ[15]	AU24		M_-ACT_A {8}
MDA48	AP2	DDR0_DQ[48]/DDR1_DQ[32]			
MDA49	AM4	DDR0_DQ[49]/DDR1_DQ[33]	AY15		M_DDR_PARA {8}
MDA50	AP3	DDR0_DQ[50]/DDR1_DQ[34]	AT23		M_-ALERT_A {8}
MDA51	AM3	DDR0_DQ[51]/DDR1_DQ[35]			
MDA52	AP4	DDR0_DQ[52]/DDR1_DQ[36]	AF39	M_-DQSA0	
MDA53	AM2	DDR0_DQ[53]/DDR1_DQ[37]	AK39	M_-DQSA1	
MDA54	AP1	DDR0_DQ[54]/DDR1_DQ[38]	AP39	M_-DQSA2	
MDA55	AM1	DDR0_DQ[55]/DDR1_DQ[39]	AU36	M_-DQSA3	
MDA56	AK3	DDR0_DQ[56]/DDR1_DQ[40]	AW7	M_-DQSA4	
MDA57	AH1	DDR0_DQ[57]/DDR1_DQ[41]	AU3	M_-DQSA5	
MDA58	AK4	DDR0_DQ[58]/DDR1_DQ[42]	AN3	M_-DQSA6	
MDA59	AH2	DDR0_DQ[59]/DDR1_DQ[43]	AJ3	M_-DQSA7	
MDA60	AH4	DDR0_DQ[60]/DDR1_DQ[44]			
MDA61	AK2	DDR0_DQ[61]/DDR1_DQ[45]	AF38	M_DQSA0	
MDA62	AH3	DDR0_DQ[62]/DDR1_DQ[46]	AK38	M_DQSA1	
MDA63	AK1	DDR0_DQ[63]/DDR1_DQ[47]	AP38	M_DQSA2	
			AV36	M_DQSA3	
			AV7	M_DQSA4	
			AU2	M_DQSA5	
			AN2	M_DQSA6	
			AJ2	M_DQSA7	
			AV32		
			AU32		

DDR0_CKP[0]	
DDR0_CKN[0]	
DDR0_CKP[1]	
DDR0_CKN[1]	
DDR0_CKP[2]	
DDR0_CKN[2]	
DDR0_CKP[3]	
DDR0_CKN[3]	
DDR0_CKE[0]	
DDR0_CKE[1]	
DDR0_CKE[2]	
DDR0_CKE[3]	
DDR0_CS#[0]	
DDR0_CS#[1]	
DDR0_CS#[2]	
DDR0_CS#[3]	
DDR0_ODT[0]	
DDR0_ODT[1]	
DDR0_ODT[2]	
DDR0_ODT[3]	
DDR0_BA[0]/DDR0_CAB[4]/DDR0_BA[0]	
DDR0_BA[1]/DDR0_CAB[6]/DDR0_BA[1]	
DDR0_BA[2]/DDR0_CAA[5]/DDR0_BG[0]	
DDR0_RAS#/DDR0_CAB[3]/DDR0_MA[16]	
DDR0_WE#/DDR0_CAB[2]/DDR0_MA[14]	
DDR0_CAS#/DDR0_CAB[1]/DDR0_MA[15]	
DDR0_MA[0]/DDR0_CAB[9]/DDR0_MA[0]	
DDR0_MA[1]/DDR0_CAB[8]/DDR0_MA[1]	
DDR0_MA[2]/DDR0_CAB[5]/DDR0_MA[2]	
DDR0_MA[3]	
DDR0_MA[4]	
DDR0_MA[5]/DDR0_CAA[0]/DDR0_MA[5]	
DDR0_MA[6]/DDR0_CAA[2]/DDR0_MA[6]	
DDR0_MA[7]/DDR0_CAA[4]/DDR0_MA[7]	
DDR0_MA[8]/DDR0_CAA[3]/DDR0_MA[8]	
DDR0_MA[9]/DDR0_CAA[1]/DDR0_MA[9]	
DDR0_MA[10]/DDR0_CAB[7]/DDR0_MA[10]	
DDR0_MA[11]/DDR0_CAA[7]/DDR0_MA[11]	
DDR0_MA[12]/DDR0_CAA[6]/DDR0_MA[12]	
DDR0_MA[13]/DDR0_CAB[0]/DDR0_MA[13]	
DDR0_MA[14]/DDR0_CAA[9]/DDR0_BG[1]	
DDR0_MA[15]/DDR0_CAA[8]/DDR0_ACT#	
DDR0_PAR	
DDR0_ALERT#	
DDR0_DQSN[0]	
DDR0_DQSN[1]	
DDR0_DQSN[2]/DDR0_DQSN[4]	
DDR0_DQSN[3]/DDR0_DQSN[5]	
DDR0_DQSN[4]/DDR1_DQSN[0]	
DDR0_DQSN[5]/DDR1_DQSN[1]	
DDR0_DQSN[6]/DDR1_DQSN[4]	
DDR0_DQSN[7]/DDR1_DQSN[5]	
DDR0_DQSP[0]	
DDR0_DQSP[1]	
DDR0_DQSP[2]/DDR0_DQSP[4]	
DDR0_DQSP[3]/DDR0_DQSP[5]	
DDR0_DQSP[4]/DDR1_DQSP[0]	
DDR0_DQSP[5]/DDR1_DQSP[1]	
DDR0_DQSP[6]/DDR1_DQSP[4]	
DDR0_DQSP[7]/DDR1_DQSP[5]	
DDR0_DQSP[8]	
DDR0_DQSP[8]	
DDR0_ECC[0]	
DDR0_ECC[1]	
DDR0_ECC[2]	
DDR0_ECC[3]	
DDR0_ECC[4]	
DDR0_ECC[5]	
DDR0_ECC[6]	
DDR0_ECC[7]	

DDR CHANNEL A

1 OF12

LGA1151

CPU-SK/1151/S/15

ILM_BP_CR/115X/NORMAL NI/[12KRC-0F0001-52R_12KRC-0F0001-51R]

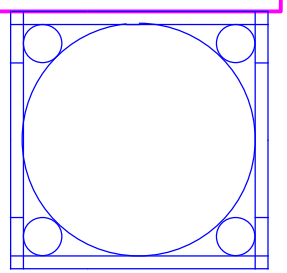

Need check the new CPU ME

LGA1151B SKT_H4 LGA1151

MDB0	AD34	DDR1_DQ[0]/DDR0_DQ[16]	AM20	M_DCLKB0	M_DCLKB0 {9}
MDB1	AD35	DDR1_DQ[1]/DDR0_DQ[17]	AM21	M_-DCLKB0	M_-DCLKB0 {9}
MDB2	AG35	DDR1_DQ[2]/DDR0_DQ[18]	AP22	M_DCLKB1	M_DCLKB1 {9}
MDB3	AH35	DDR1_DQ[3]/DDR0_DQ[19]	AP21	M_-DCLKB1	M_-DCLKB1 {9}
MDB4	AE35	DDR1_DQ[4]/DDR0_DQ[20]	AN20	M_DCLKB2	M_DCLKB2 {9}
MDB5	AE34	DDR1_DQ[5]/DDR0_DQ[21]	AN21	M_-DCLKB2	M_-DCLKB2 {9}
MDB6	AG34	DDR1_DQ[6]/DDR0_DQ[22]	AP19	M_DCLKB3	M_DCLKB3 {9}
MDB7	AH34	DDR1_DQ[7]/DDR0_DQ[23]	AP20	M_-DCLKB3	M_-DCLKB3 {9}
MDB8	AK35	DDR1_DQ[8]/DDR0_DQ[24]			
MDB9	AL35	DDR1_DQ[9]/DDR0_DQ[25]	AY29	CKEB0	CKEB0 {9}
MDB10	AK32	DDR1_DQ[10]/DDR0_DQ[26]	AV29	CKEB1	CKEB1 {9}
MDB11	AL32	DDR1_DQ[11]/DDR0_DQ[27]	AW29	CKEB2	CKEB2 {9}
MDB12	AK34	DDR1_DQ[12]/DDR0_DQ[28]	AU29	CKEB3	CKEB3 {9}
MDB13	AL34	DDR1_DQ[13]/DDR0_DQ[29]			
MDB14	AK31	DDR1_DQ[14]/DDR0_DQ[30]	AP17	M_-CSB0	M_-CSB0 {9}
MDB15	AL31	DDR1_DQ[15]/DDR0_DQ[31]	AN15	M_-CSB1	M_-CSB1 {9}
MDB16	AP35	DDR1_DQ[16]/DDR0_DQ[48]	AN17	M_-CSB2	M_-CSB2 {9}
MDB17	AN35	DDR1_DQ[17]/DDR0_DQ[49]	AM15	M_-CSB3	M_-CSB3 {9}
MDB18	AN32	DDR1_DQ[18]/DDR0_DQ[50]			
MDB19	AP32	DDR1_DQ[19]/DDR0_DQ[51]	AM16	MODT_B0	
MDB20	AN34	DDR1_DQ[20]/DDR0_DQ[52]	AL16	MODT_B1	
MDB21	AP34	DDR1_DQ[21]/DDR0_DQ[53]	AP15	MODT_B2	
MDB22	AN31	DDR1_DQ[22]/DDR0_DQ[54]	AL15	MODT_B3	
MDB23	AP31	DDR1_DQ[23]/DDR0_DQ[55]			
MDB24	AL29	DDR1_DQ[24]/DDR0_DQ[56]	AN18	MAAB16	
MDB25	AM29	DDR1_DQ[25]/DDR0_DQ[57]	AL17	MAAB14	
MDB26	AP29	DDR1_DQ[26]/DDR0_DQ[58]	AP16	MAAB15	
MDB27	AR29	DDR1_DQ[27]/DDR0_DQ[59]			
MDB28	AM28	DDR1_DQ[28]/DDR0_DQ[60]	AL18	SBAB0	SBAB0 {9}
MDB29	AL28	DDR1_DQ[29]/DDR0_DQ[61]	AM18	SBAB1	SBAB1 {9}
MDB30	AR28	DDR1_DQ[30]/DDR0_DQ[62]	AW28	BG_B0	BG_B0 {9}
MDB31	AP28	DDR1_DQ[31]/DDR0_DQ[63]			
MDB32	AR12	DDR1_DQ[32]/DDR1_DQ[16]	AL19	MAAB0	
MDB33	AP12	DDR1_DQ[33]/DDR1_DQ[17]	AL22	MAAB1	
MDB34	AM13	DDR1_DQ[34]/DDR1_DQ[18]	AP22	MAAB2	
MDB35	AL13	DDR1_DQ[35]/DDR1_DQ[19]	AM23	MAAB3	
MDB36	AR13	DDR1_DQ[36]/DDR1_DQ[20]	AP23	MAAB4	
MDB37	AP13	DDR1_DQ[37]/DDR1_DQ[21]	AL23	MAAB5	
MDB38	AM12	DDR1_DQ[38]/DDR1_DQ[22]	AW26	MAAB6	
MDB39	AL12	DDR1_DQ[39]/DDR1_DQ[23]	AY26	MAAB7	
MDB40	AP10	DDR1_DQ[40]/DDR1_DQ[24]	AU26	MAAB8	
MDB41	AR10	DDR1_DQ[41]/DDR1_DQ[25]	AW27	MAAB9	
MDB42	AR7	DDR1_DQ[42]/DDR1_DQ[26]	AP18	MAAB10	
MDB43	AP7	DDR1_DQ[43]/DDR1_DQ[27]	AU27	MAAB11	
MDB44	AR9	DDR1_DQ[44]/DDR1_DQ[28]	AV27	MAAB12	
MDB45	AP9	DDR1_DQ[45]/DDR1_DQ[29]	AR15	MAAB13	
MDB46	AR6	DDR1_DQ[46]/DDR1_DQ[30]	AY28	BG_B1	BG_B1 {9}
MDB47	AP6	DDR1_DQ[47]/DDR1_DQ[31]	AU28		M_-ACT_B {9}
MDB48	AM10	DDR1_DQ[48]			
MDB49	AL10	DDR1_DQ[49]	AL20		M_DDR_PARB {9}
MDB50	AM7	DDR1_DQ[50]	AY25		M_-ALERT_B {9}
MDB51	AL7	DDR1_DQ[51]			
MDB52	AM9	DDR1_DQ[52]	AF34	M_-DQSB0	
MDB53	AL9	DDR1_DQ[53]	AK33	M_-DQSB1	
MDB54	AM6	DDR1_DQ[54]	AN33	M_-DQSB2	
MDB55	AL6	DDR1_DQ[55]	AP29	M_-DQSB3	
MDB56	AJ6	DDR1_DQ[56]	AN13	M_-DQSB4	
MDB57	AJ7	DDR1_DQ[57]	AR8	M_-DQSB5	
MDB58	AE6	DDR1_DQ[58]	AM8	M_-DQSB6	
MDB59	AE7	DDR1_DQ[59]	AG6	M_-DQSB7	
MDB60	AH7	DDR1_DQ[60]			
MDB61	AH6	DDR1_DQ[61]	AF35	M_DQSB0	
MDB62	AE7	DDR1_DQ[62]	AL33	M_DQSB1	
MDB63	AF6	DDR1_DQ[63]	AP33	M_DQSB2	
			AN28	M_DQSB3	
AR25		DDR1_ECC[0]	AN12	M_DQSB4	
AR26		DDR1_ECC[1]	AP8	M_DQSB5	
AM26		DDR1_ECC[2]	AL8	M_DQSB6	
AM25		DDR1_ECC[3]	AG7	M_DQSB7	
AP26		DDR1_ECC[4]			
AP25		DDR1_ECC[5]			
AL25		DDR1_ECC[6]	AN25		
AL26		DDR1_ECC[7]	AN26		

DDR1_CKP[0]	
DDR1_CKN[0]	
DDR1_CKP[1]	
DDR1_CKN[1]	
DDR1_CKP[2]	
DDR1_CKN[2]	
DDR1_CKP[3]	
DDR1_CKN[3]	
DDR1_CKE[0]	
DDR1_CKE[1]	
DDR1_CKE[2]	
DDR1_CKE[3]	
DDR1_CS#[0]	
DDR1_CS#[1]	
DDR1_CS#[2]	
DDR1_CS#[3]	
DDR1_ODT[0]	
DDR1_ODT[1]	
DDR1_ODT[2]	
DDR1_ODT[3]	
DDR1_RAS#/DDR1_CAB[3]/DDR1_MA[16]	
DDR1_WE#/DDR1_CAB[2]/DDR1_MA[14]	
DDR1_CAS#/DDR1_CAB[1]/DDR1_MA[15]	
DDR1_BA[0]/DDR1_CAB[4]/DDR1_BA[0]	
DDR1_BA[1]/DDR1_CAB[6]/DDR1_BA[1]	
DDR1_BA[2]/DDR1_CAA[5]/DDR1_BG[0]	
DDR1_MA[0]/DDR1_CAB[9]/DDR1_MA[0]	
DDR1_MA[1]/DDR1_CAB[8]/DDR1_MA[1]	
DDR1_MA[2]/DDR1_CAB[5]/DDR1_MA[2]	
DDR1_MA[3]	
DDR1_MA[4]	
DDR1_MA[5]/DDR1_CAA[0]/DDR1_MA[5]	
DDR1_MA[6]/DDR1_CAA[2]/DDR1_MA[6]	
DDR1_MA[7]/DDR1_CAA[4]/DDR1_MA[7]	
DDR1_MA[8]/DDR1_CAA[3]/DDR1_MA[8]	
DDR1_MA[9]/DDR1_CAA[1]/DDR1_MA[9]	
DDR1_MA[10]/DDR1_CAB[7]/DDR1_MA[10]	
DDR1_MA[11]/DDR1_CAA[7]/DDR1_MA[11]	
DDR1_MA[12]/DDR1_CAA[6]/DDR1_MA[12]	
DDR1_MA[13]/DDR1_CAB[0]/DDR1_MA[13]	
DDR1_MA[14]/DDR1_CAA[9]/DDR1_BG[1]	
DDR1_MA[15]/DDR1_CAA[8]/DDR1_ACT#	
DDR1_PAR	
DDR1_ALERT#	
DDR1_DQSN[0]/DDR0_DQSN[2]	
DDR1_DQSN[1]/DDR0_DQSN[3]	
DDR1_DQSN[2]/DDR0_DQSN[6]	
DDR1_DQSN[3]/DDR0_DQSN[7]	
DDR1_DQSN[4]/DDR1_DQSN[2]	
DDR1_DQSN[5]/DDR1_DQSN[3]	
DDR1_DQSN[6]	
DDR1_DQSN[7]	
DDR1_DQSP[0]/DDR0_DQSP[2]	
DDR1_DQSP[1]/DDR0_DQSP[3]	
DDR1_DQSP[2]/DDR0_DQSP[6]	
DDR1_DQSP[3]/DDR0_DQSP[7]	
DDR1_DQSP[4]/DDR1_DQSP[2]	
DDR1_DQSP[5]/DDR1_DQSP[3]	
DDR1_DQSP[6]	
DDR1_DQSP[7]	
DDR1_DQSP[8]	
DDR1_DQSN[8]	

DDR CHANNEL B

2 OF 12

CPU-SK/1151/S/15

DDR_VREF_CA	AB40 VREF_CAB	VREF_CAB {8}
DDR0_VREF_DQ	AC40	
DDR1_VREF_DQ	AC39 VREF_DQB	VREF_DQB {9}

{8} MODT_A[0..3]		MODT_A[0..3]
{9} MODT_B[0..3]		MODT_B[0..3]
{8} MDA[0..63]		MDA[0..63]
{9} MDB[0..63]		MDB[0..63]
{8} M_DQSA[0..7]		M_DQSA[0..7]
{8} M_-DQSA[0..7]		M_-DQSA[0..7]
{8} MAAA[0..16]		MAAA[0..16]
{9} MAAB[0..16]		MAAB[0..16]
{9} M_DQSB[0..7]		M_DQSB[0..7]
{9} M_-DQSB[0..7]		M_-DQSB[0..7]

Title	Gigabyte Technology CPU LGA1151-B	
Size Custom	Document Number GA-X150-PLUS WS	Rev 1.0
Date: Monday, November 23, 2015	Sheet 5 of 49	

迅维电脑维修培训学校 400800990 www.xinxunwei.com
Gigabyte Confidential Do not copy www.chinafix.com